Climadiff

ENTRUST YOUR WINES TO A SPECIALIST

Reference: CLE7

Chambrage cellar 22 liters

- Capacity: 22 L i.e. 7 bottles*
- Built-under counter installation
- Design: black body & stainless steel door frame
- Cooling system: thermoelectric
- Type of cold: air moving system
- Adjustable temperature range of use: 9-18°C[12]
- Electronic regulation
- Thermometer with blue electronic display
- Blue LED lights with switch button
- 1 glass door, 2-layers tempered glass (transparent)

Climadiff exclusivity!
*You could store **a Champagne bottle** in the lower part of the wine cellar.*

[1]This appliance belongs to category 10 according to the european regulation N°1060/2010. The temperature setting is from 14° to 18°C. However the appliance's technical performances allow to reach a wider temperature range from 9° to 18°C.

[2]This product is designed for maximum cooling of 14°C below ambient temperature.

Eco-responsibility

Our products are manufactured in compliance with European environmental rules.

Energy consumption is calculated based on the result obtained for 24h in standard test conditions. The actual energy consumption depends on the conditions of use and location of the device.
This equipment is designed to be used in an ambient temperature between 16-32°C.

Alcohol abuse is dangerous for health, please consume in moderation.

*Capacity given as an indication with 75cl Bordeaux traditional type bottles and measured with 6 shelves. Adding shelves reduce considerably the total capacity.

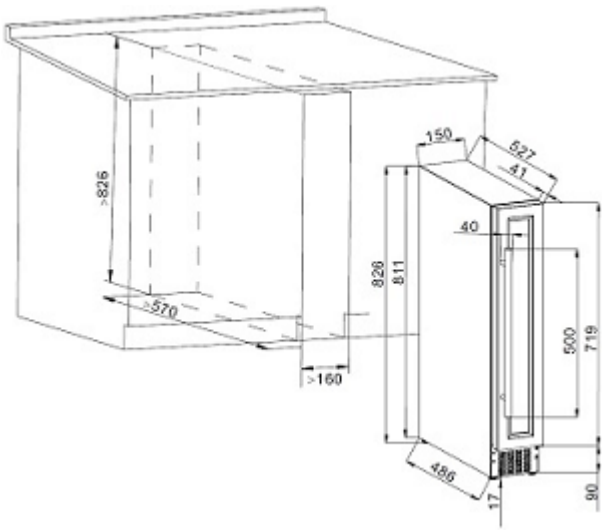

Climadiff

ENTRUST YOUR WINES TO A SPECIALIST

Reference: CLE7

Chambrage cellar 22 liters

> EQUIPMENTS INCLUDED

- 6 fixed wire shelves
- 4 adjustable feet (height 7.5 cm)

> TECHNICAL CHARACTERISTICS

- Energy class: B
- Annual electrical consumption: 176 kWh
- Climatic class: N (16-32°C)
- Noise level: 39 dB
- Voltage: 220-240 V
- Power input: 70 W
- Category: 10 - Multi-use and other refrigerating

> SAFETY

- **Anti-freeze security**: ensures a positive temperature in your cellar and prevents the freezing of your bottles in winter

> LOGISTIC DATAS

Gross dimensions (WxDxH cm)		: 22 x 59 x 87,5
Net dimensions (WxDxH cm)		: 15 x 52,7 x 82,6
Gross weight (kg)		: 14.08
Net weight (kg)		: 12.58
Full truck (pcs)		: 0
Container (pcs)	20'	: 256
	40'	: 538
	40' HC	: 611
Gencod		3595320104295

> COMPATIBLE ACCESSORIES

Only available in spare parts

Non-contractual pictures
Last update: 05/03/2019